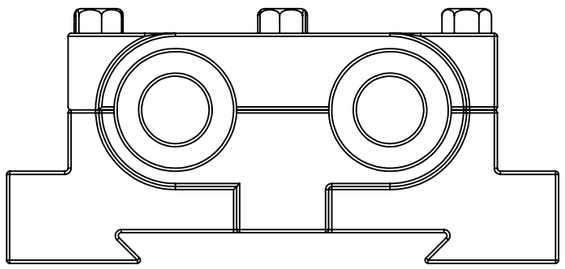

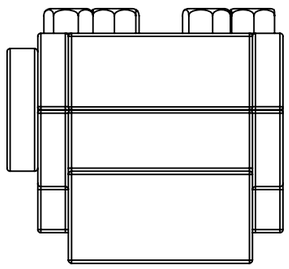

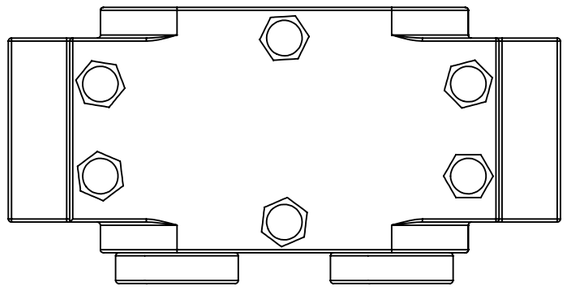

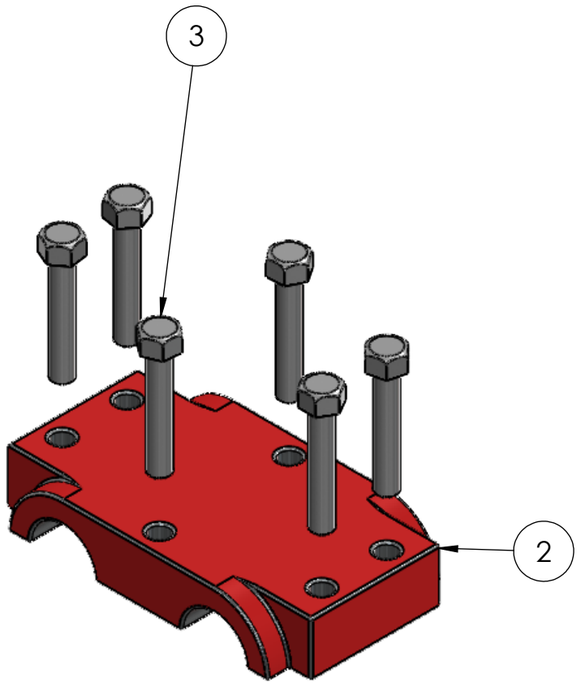

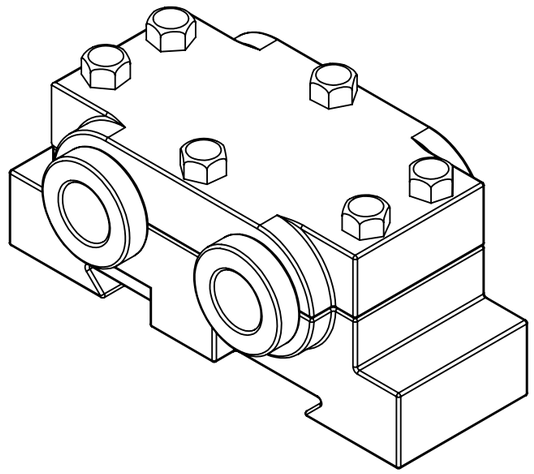

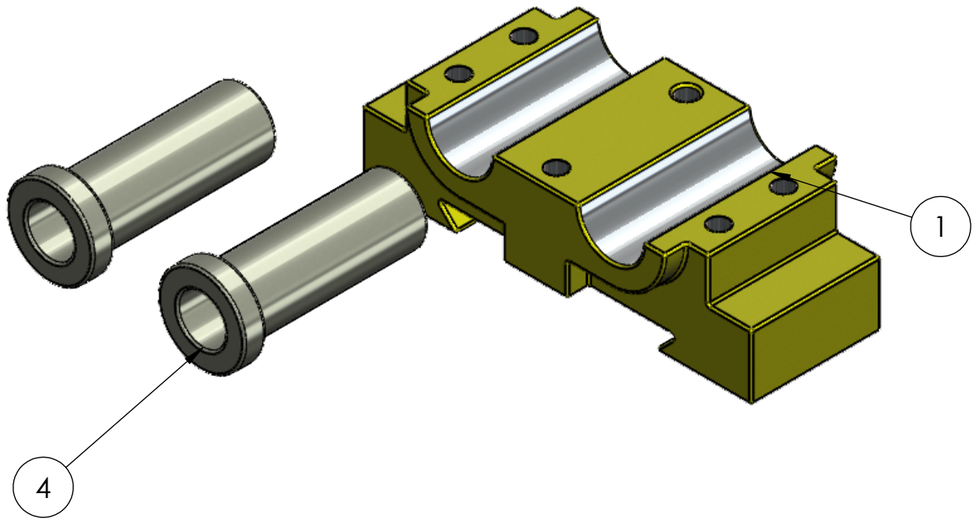

ITEM NO.	PART NUMBER	QTY.
1	Part1 Base	1
2	Part2 cap	1
3	Part3 Bolt	6
4	Part4 Bush	2

UNLESS OTHERWISE SPECIFIED:
DIMENSIONS ARE IN MILLIMETERS
SURFACE FINISH:
TOLERANCES:
LINEAR:
ANGULAR:

FINISH:

DEBURR AND BREAK SHARP EDGES

DO NOT SCALE DRAWING

REVISION

	NAME	SIGNATURE	DATE
DRAWN	DHEERAJ KUMAR		
CHK'D			
APPV'D			
MFG			
Q.A			

TITLE:

Double Bearing

MATERIAL:

WEIGHT:

DWG NO.

A3

SCALE:1:1

SHEET 1 OF 1

SOLIDWORKS Educational Product. For Instructional Use Only.